TRAY BOX(TB4)

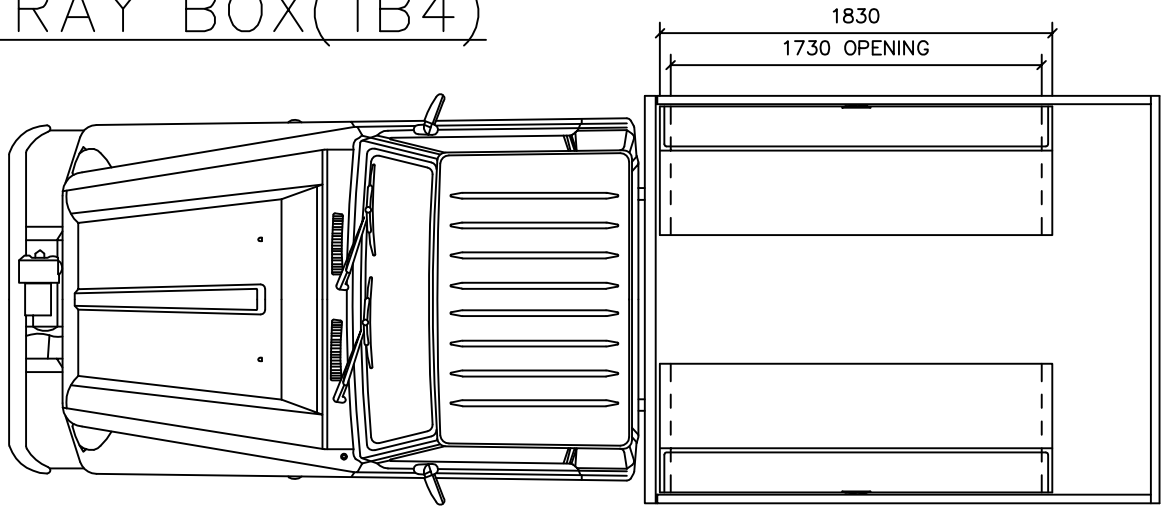

ROSCOS
TRADE MATE®

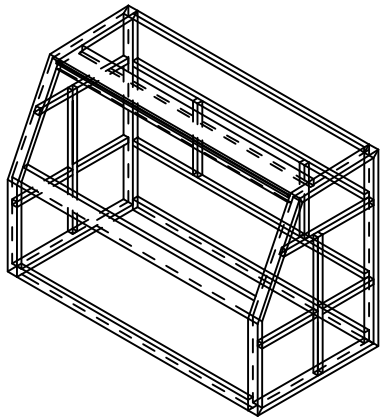

ISOMETRIC VIEW

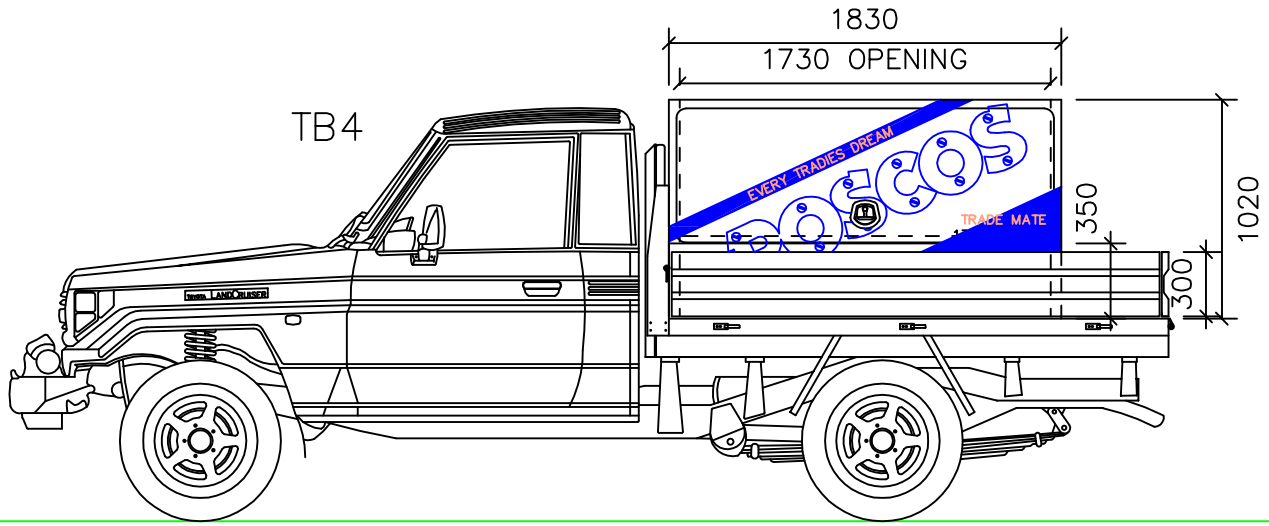

Passenger Side View

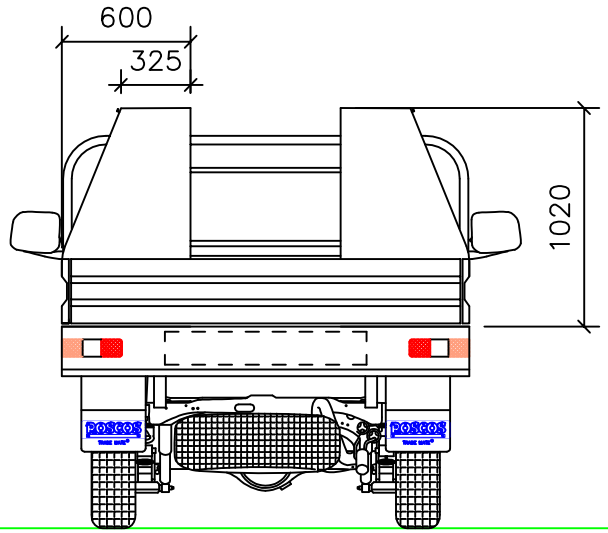

Rear View

MATERIAL: AS PER MATERIAL LIST
FINISH: PAINT TO CLIENT SPEC

REVISIONS				
REV	BY	DATE	DESCRIPTION	APP

ROSCOS TRADE MATE®
16 DOBRA RD BIBRA LAKE
W. AUSTRALIA 6163
TEL (08) 9434 6400
FAX (08) 9418 3436
E-MAIL: info@roscos.com
WEB: www.roscos.com

COPYRIGHT THIS DRAWING MUST NOT BE COPIED OR REPRODUCED IN ANY FORM OR USED FOR ANY PURPOSE OTHER THAN ORIGINALLY INTENDED WITHOUT WRITTEN APPROVAL.

PROJECT: ROSCOS TRADE MATE
DESCRIPTION: TRAY BOX 4 ONE BEND 1020 HIGH 1830 LONG TRAY BOX

DRWN: A.D		SCALE
DATE: 14.05.07		N.T.S.
APP:		
DRG. No. TB4		REV 0

FILE: SALESDWGS/SPECSHEET